ICOM® INSTRUCTION MANUAL

2.4 GHz DOWN CONVERTER

AG-2400

Thank you for purchasing this Icom product. The AG-2400 is designed and built with Icom's superior technology and craftsmanship. With proper care this product should provide you with years of trouble-free operation.

IMPORTANT

READ THIS INSTRUCTION MANUAL CAREFULLY before attempting to operating the AG-2400.

SAVE THIS INSTRUCTION MANUAL—This manual contains important safety and operating instructions for the AG-2400.

PRECAUTIONS

CAUTION! The coaxial cable between this down converter unit and your transceiver should be clamped to the antenna pole to prevent the down converter unit from weighing down the preamplifier.

KEEP the unit away from TV or radio antennas to prevent interference.

CAUTION FOR INSTALLATION

AG-2400 is intended for professional installation only. We are not responsible for any building breakage, any damage resulting from a drop of the AG-2400 from a high place or unstable site resulting in personal injury, nor any accident in any other cases. If the AG-2400 must be installed at such high place or unstable site, be sure to consult an expert engineer.

◇ *FEATURES*

- ❍ *Down Converter for satellite (AO-40) in S-mode operation*
- ❍ *Built-in Low Noise Amplifier (LNA) Total NF value is less than 1.5 dB, Conversion Gain is more than 25 dB*
- ❍ *Built-in Receiver-Suppression-Control Filter closes up the uplink and downlink antennas. (1.8 feet at the minimum)*
- ❍ *Built-in the Receiving Protection Circuit*
  - *The built-in circuit protector may not function correctly when the accidental transmission such as continuous transmission is applied. Such transmission is out of the specified guarantee for accidental transmission damage to the AG-2400.*
- ❍ *Waterproof, weather resistance and prevention from rusting due to salt water.*
- ❍ *No power cable wiring is necessary.*

EXPLICIT DEFINITIONS

WORD	DEFINITION
⚠**WARNING**	Personal injury, fire hazard or electric shock may occur.
CAUTION	Equipment damage may occur.
NOTE	If disregarded, inconvenience only. No risk of personal injury, fire or electric shock.

SPECIFICATIONS

- Receive frequency : 2400–2402 MHz
- Out put frequency : 144–146 MHz
- Total gain : More than 25 dB
- Total NF value : Less than 1.5 dB
- Input/Output connector : Type-N
- Antenna impedance : 50 Ω
- Grounding : Negative grounding
- Power consumption : Approx. 200 mA
- Dimensions (Projections not included)
  : 172(W)×69.5(H)×230(D) mm
  : $6\frac{25}{32}$(W)×$2\frac{3}{4}$(H)×$9\frac{1}{16}$(D) in
- Weight (approx.) : 1.18 kg; 2.6 lb 41 oz

SUPPLIED ACCESSORIES

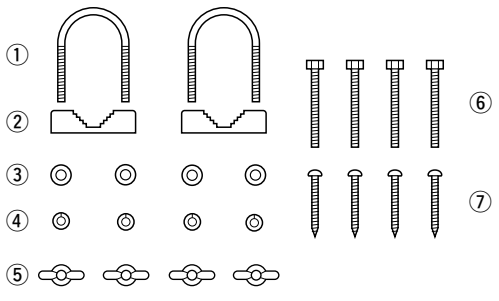

① U-bolts 2
② U-bolt plates 2
③ Washers (M6) 4
④ Spring washers (M6) 4
⑤ Wing nuts (M6) 4
⑥ Hex head bolts (M6×50) 4
⑦ Self-tapping screws (6×30 A0) 4
- Instruction manual

Icom, Icom Inc. and the ICOM logo are registered trademarks of Icom Incorporated (Japan) in the United States, the United Kingdom, Germany, France, Spain, Russia and/or other countries.

■ Installation

• Use the U-bolts

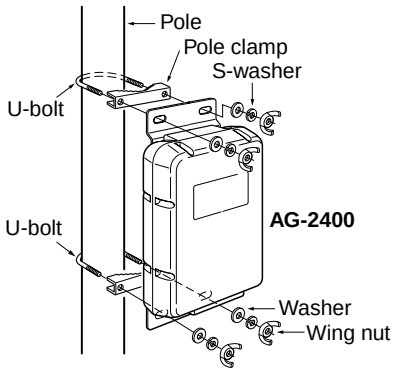

• Use the nuts

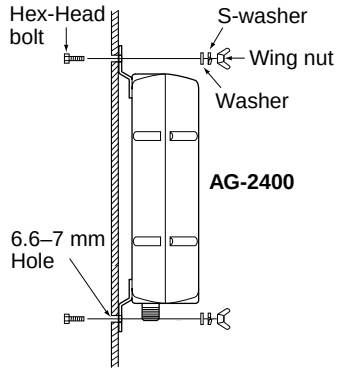

• About waterproofing

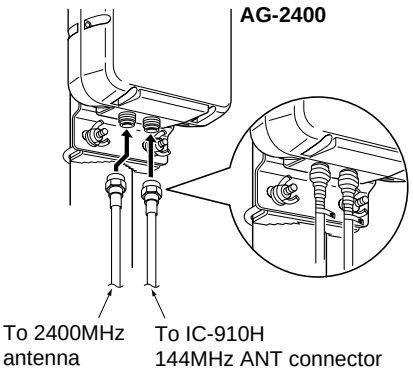

The AG-2400 can also be installed with self-tapping screws.
Tighten the U-bolts, Wing nuts, etc. about 2 weeks after initial installation.

NOTE: Cover the type-N connector with self valcanizing tape to avoid water seeping into the unit. Binding the type-N connector with self valcanizing tape increases the waterproofing of the connection mold.

■ Connections

Satellite communications via the AO-40 can be made when using the IC-910H satellite function mode and the AG-2400.
For satellite communications, an antenna rotator which adjusts the antenna direction (azimuth), and an elevation angle rotator which adjusts the angle above the horizon, are necessary.

See back page on how to operate.

• Connect AG-2400 and IC-910H

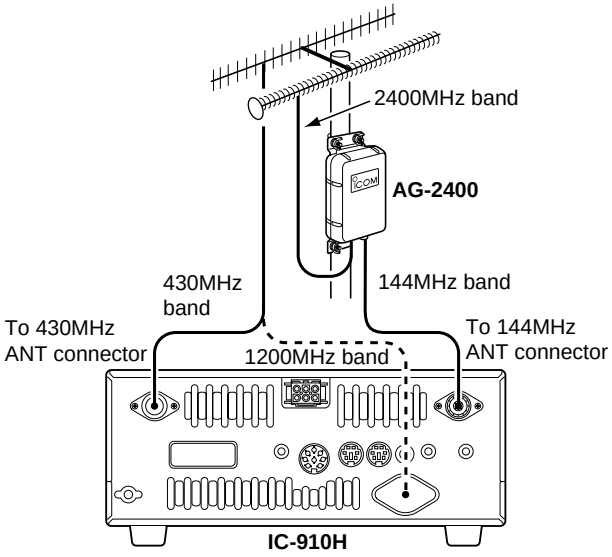

* 1200 MHz band operation also available with AO-40.

◇ Converting frequency with the AG-2400

• 2400.225–2400.475 MHz to 144.225–144.475 MHz
• 2401.210–2401.495 MHz to 145.210–145.495 MHz

NOTE: Turn the pre-amplifier controller for 144 MHz ON during satellite operation with the AG-2400, because the external pre-amplifier control voltage is used as the AG-2400's main power.

CAUTION! NEVER transmit on the 144 MHz band. The AG-2400 may be damaged. The built-in protector may not function correctly when accidental transmission such as continuous transmission is applied.

◇ Before setting

Test to operate on the ground before installation is recommended.

① Connect AG-2400 and IC-910H. (See the figure at left.)
② Turn the IC-910H power ON.
  • Push [M/S] to set the 144 MHz as in the MAIN band.
③ Push [SSB/CW] to select SSB or CW mode.
④ Push [ATT•P.AMP] for 1 sec. to turn the AG-2400 power ON.
  • When the AG-2400 functions correctly, the noise level rise up.

◇ Orbit information

Orbit information describes satellite location, wave angles, etc. This information may be available in ham magazines or organization issues, such as from ARRL or RSGB handbook, etc.
Use of satellite tracking software is also convenient.

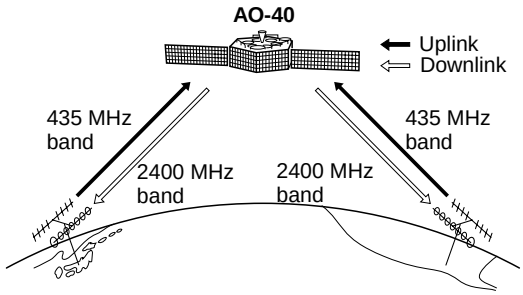

◇ AO-40

• Uplink frequency : 435.780–435.495 MHz
• Downlink frequency: 2400.225–2400.475 MHz (S1 BAND)
• Downlink frequency: 2401.210–2401.495 MHz (S2 BAND)
• Beacon frequency : 2400.338 MHz (S1 BAND)
  2401.323 MHz (S2 BAND)

Confirm a satellite's operating mode in advance through documentation (magazines, etc.) or via appropriate satellite tracking software. In the wrong mode, you cannot use the satellite even if you receive its beacon signal.

■ Activating the satellite mode

Operating frequencies in satellite mode can be set both before and after activating the satellite mode. Normal and reverse tracking are available.

◇ Transferring the VFO frequency to the satellite VFO.

① Set the downlink frequency (receive) in the MAIN band.
② Set the uplink frequency (transmit) in the SUB band.
③ Push [SATELLITE] for 1 sec. to transfer the frequencies, set in steps ① and ②, into the satellite VFO.
- Satellite mode is automatically selected after transferring.
- "SATL" indicator with either "NOR" or "REV" indicator appears.
- VFO and memory mode indication are displayed in the SUB band (lower area) during satellite mode.

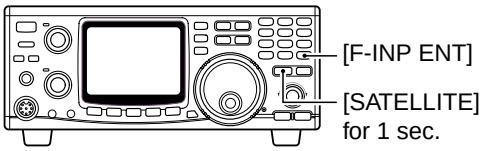

■ Setting the satellite VFO

① Push [SATELLITE] to enter the satellite mode.
- "SATL" indicator with either "NOR" or "REV" indicator appears.

② Push [V/M 1] to toggle satellite VFO and memory mode.
- VFO or memory mode indication is displayed in the SUB band (lower area).

③ Push [SCAN . M] to enable the downlink frequency tuning.
- Uplink frequency indication disappears.
- Rotate the tuning dial to set the downlink frequency and push [SSB/CW] to select the operating mode.
- Push [SCAN . M] again after the tuning.

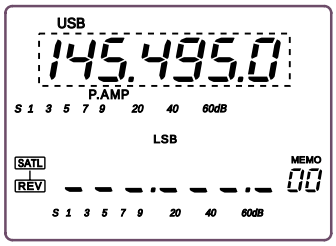

④ Push [SWP 0 S] to enable the uplink frequency tuning.
- Downlink frequency indication disappears.
- Push [SWP 0 S] again after the tuning.

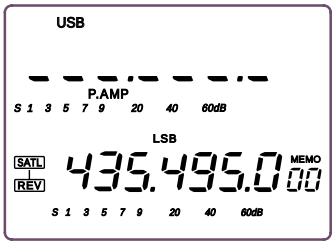

NOTE: To select the operating mode for the uplink, push [SUB] to enable the SUB band access.

■ Tracking selection

Push [F-INP ENT NOR ⟷ REV] for 1 sec. to switch between normal and reverse tracking.

◇ Normal tracking

Both downlink and uplink frequencies increase or decrease in the same step simultaneously by tuning dial rotation.

◇ Reverse tracking

The downlink frequency follows the tuning dial rotation, however, the uplink frequency changes in the reverse direction to the tuning dial rotation in the same step.

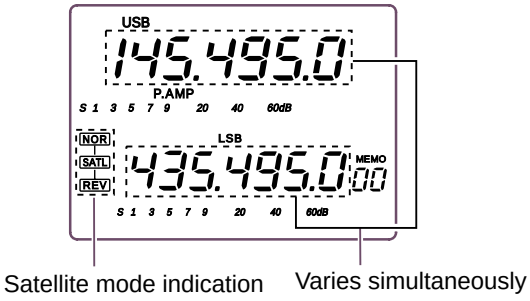

■ Preparation

① Decide on a usable satellite.
② Confirm the approximate location of the satellite and operating mode (e.g. "B," "J," etc.) through documentation (magazine, etc.) or via appropriate satellite tracking software.
③ Set the antenna direction for the desired satellite.
④ Select satellite mode on the transceiver.
- Push [SATELLITE].
- Push [F-INP ENT NOR ⟷ REV] for 1 sec. to select tracking mode if desired.

⑤ Select operating mode.

Satellite	Downlink (MAIN band)	Uplink (SUB band)
Reverse tracking type	USB (or CW)	LSB (or CW)
Normal tracking type	USB (or CW)	USB (or CW)

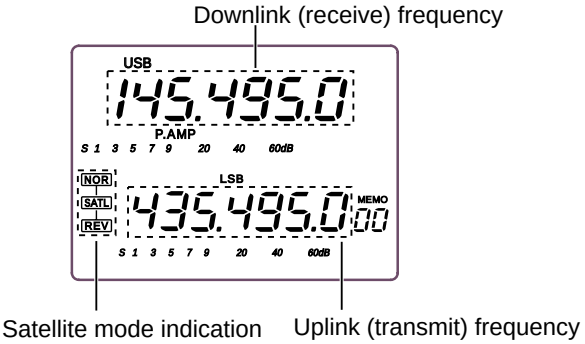

⑥ Set the downlink frequency (MAIN band) to the beacon frequency.
- Refer to a ham magazine or book for detailed information.
- Adjust the antenna direction so that the S-meter shows to its strongest level.
- The S-meter level should be noted for transmit power adjustment during a loop test.

⑦ Perform a loop test.
- Set the downlink frequency (MAIN band) to a vacant frequency within the satellite's coverage.
- Push [SWP 0 S] then, set the uplink frequency (SUB band) while transmitting a single tone such as a whistle to find your downlink signal and monitor your own signal correctly. Push [SWP 0 S] after setting.

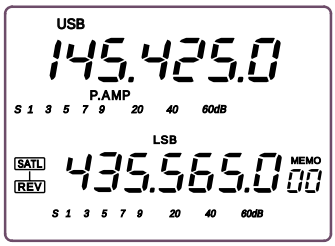

NOTE: To avoid excessive power, set the output power so that the downlink signal strength is lower than the beacon's strength.

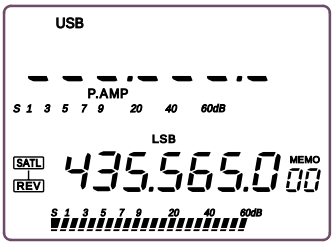

⑧ Set the desired frequency to begin your satellite communications.
- Both the downlink and uplink frequencies are changed simultaneously.

⑨ When your downlink audio drifts (Doppler effect), push [SWP 0 S] then rotate the tuning dial to adjust the uplink frequency (SUB band) only.
Push [SWP 0 S] again after setting.
- When a particular station's audio is off frequency, use the RIT function (push [RIT])

⑩ To exit the satellite operation, push [SATELLITE].

CONVENIENT: As the transceiver has 10 satellite memory channels, once set, desired satellite frequencies can be recalled instantly.

NOTE: As the downlink (MAIN band) signal is applied to the SUB band unit receiver circuit in satellite mode, an optional FL-133 CW NARROW FILTER is necessary to operate CW-N mode.

■ Satellite operation

When your own signal can be received with a loop test, satellite communication can be performed.

① Rotate the tuning dial to re-tune the uplink frequency after pushing [SWP 0 S], when shifting a frequency with the Doppler effect.
- The downlink frequency readout (MAIN band) disappears.

② Rotate the tuning dial to re-tune the downlink frequency after pushing [SCAN . M], when the operating station's signal frequency is shifted.
- RIT function can also be used for downlink frequency tuning within ±1 kHz range.

■ Satellite memory

The AG-2400 has 10 satellite memory channels to memorize both uplink and downlink frequencies and operating modes, etc.

◇ Satellite memory selection

① Push [SATELLITE] to enter the satellite mode.
② Push [V/M 1] to select satellite memory mode.
- "MEMO" indicator and memory channel number are displayed beside the uplink frequency (SUB band) indication.
- Push [V/M 1] again to select satellite VFO.

③ Push [DN▼] or [UP▲] to select the desired satellite mode memory channel.
- The channels 00-09 are selectable.
- By pushing and holding either switch, the satellite memory channel changes continuously.

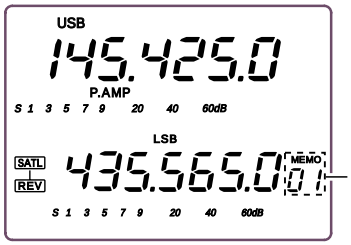

Satellite memory indication

◇ Satellite memory programming

① Select the desired satellite memory channel.
- Push [SATELLITE] to enter the satellite mode.
- Push [V/M 1] to select satellite VFO mode.
- Push [DN▼] or [UP▲] to select the desired satellite mode memory channel.

② Set the desired downlink frequency to the MAIN band and uplink frequency to the SUB band, as well as operating mode.
- Push [Scan . M] for downlink tuning, push [SWP 0 S] for uplink frequency tuning.
- Push [SUB] before the operating mode selection when selecting operating mode for the uplink.

③ Push [MW 4] for 1 sec. to program the set contents to the satellite memory channel.
- 3 beep tones sound.

NOTE: Tracking selection, normal or reverse, is not programmed in the satellite memory channels.

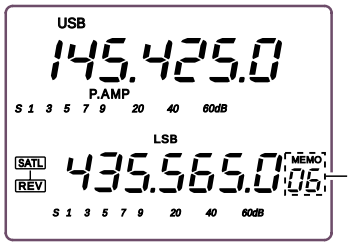

Select the desired satellite memory

Icom Inc.
1-1-32 Kamiminami, Hirano-ku, Osaka 547-0003 Japan

Count on us!

A-6150H-1EX Printed in Japan